# Data Sheet

Article number: 2301072751
Description: E+G Handwheel
VDS.150+I-A14

## Measures

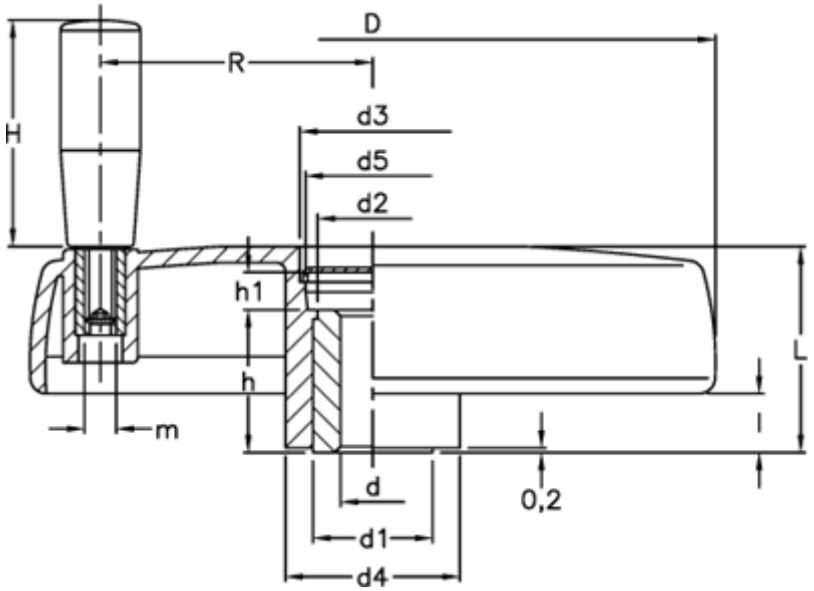


| | | | |
|---|---|---|---|
| C (N m) | = 180 | H | = 65 |
| D | = 150 | h | = 30 |
| d1 | = 26 | h1 | = 10 |
| d2 | = 24.0 | l | = 12 |
| d3 | = 34.0 | L | = 44 |
| d4 | = 38 | L (J) | = 26 |
| d5 | = 30 | m | = M8 |
| d H7 | = 14 | R | = 58.0 |

*Product drawings and brochures of any kind may contain errors for which Brd. Klee A/S cannot be liable.*